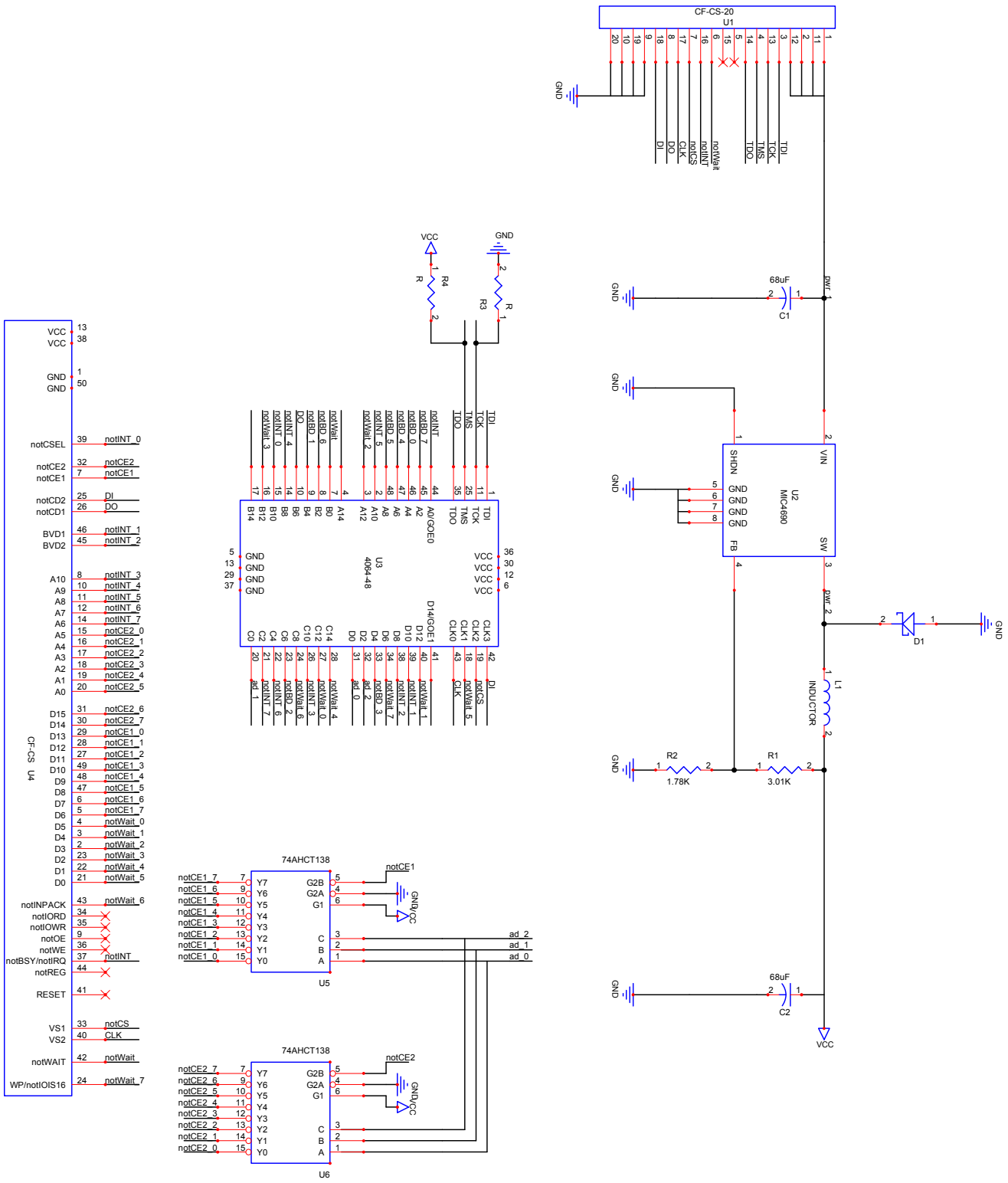

Microcad	
Title:	Delta (Compact Flash Bus Expander)
Size: A	Project: LittleBoy
File: Root.sch	
Date: 1 Feb 2005	Sheet: 1 of 1
Revision: 1.02	